NATURAL STONE RESOURCES
EXPORTERS · IMPORTERS · DISTRIBUTORS

# SILVER PREMIUM
## COPING

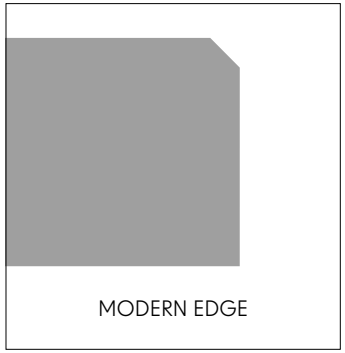


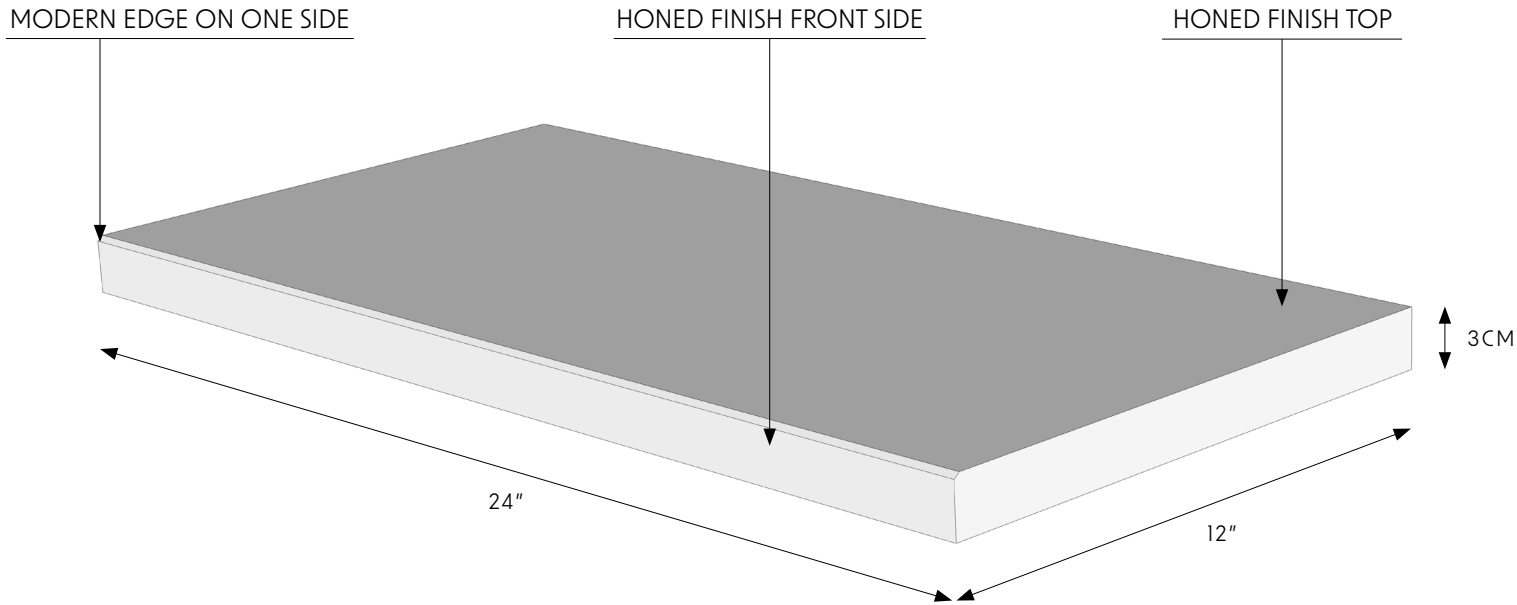


| | | | |
|---|---|---|---|
| **ITEM NAME** | SILVER PREMIUM TRAVERTINE MODERN COPING | **PART NUMBER** | TRVSILVER1224H-3MEPC |
| **COUNTRY** | TURKEY | **FORMAT/ TYPE** | COPING |
| **CATEGORY** | TRAVERTINE | **UOM** | PC |
| **FINISH** | HONED | **THICKNESS** | 3CM |
| **DIMENSIONS** | 12 X 24 | **WEIGHT** | 29 LBS |
| **PROFILE** | MODERN EDGE | **COLOR** | LIGHT GREY, DARK GREY, TAN, SILVER |

**APPLICATIONS**

MASONRY WALLS, COLUMNS, LANDSCAPE, STEPS & POOLS

FOR MORE INFO, PLEASE CONTACT CSR@NSRSTONE.COM
1800 East Via Burton St, Anaheim, CA 92806 | P. 714.821.5400 | F. 714.821.3700 | nsrstone.com

NATURAL STONE RESOURCES
EXPORTERS · IMPORTERS · DISTRIBUTORS

# SILVER PREMIUM
## COPING

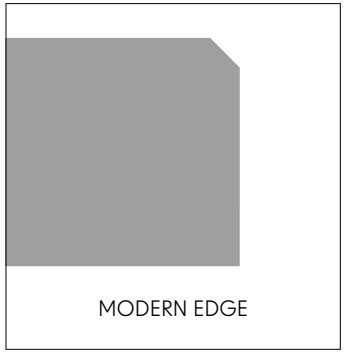


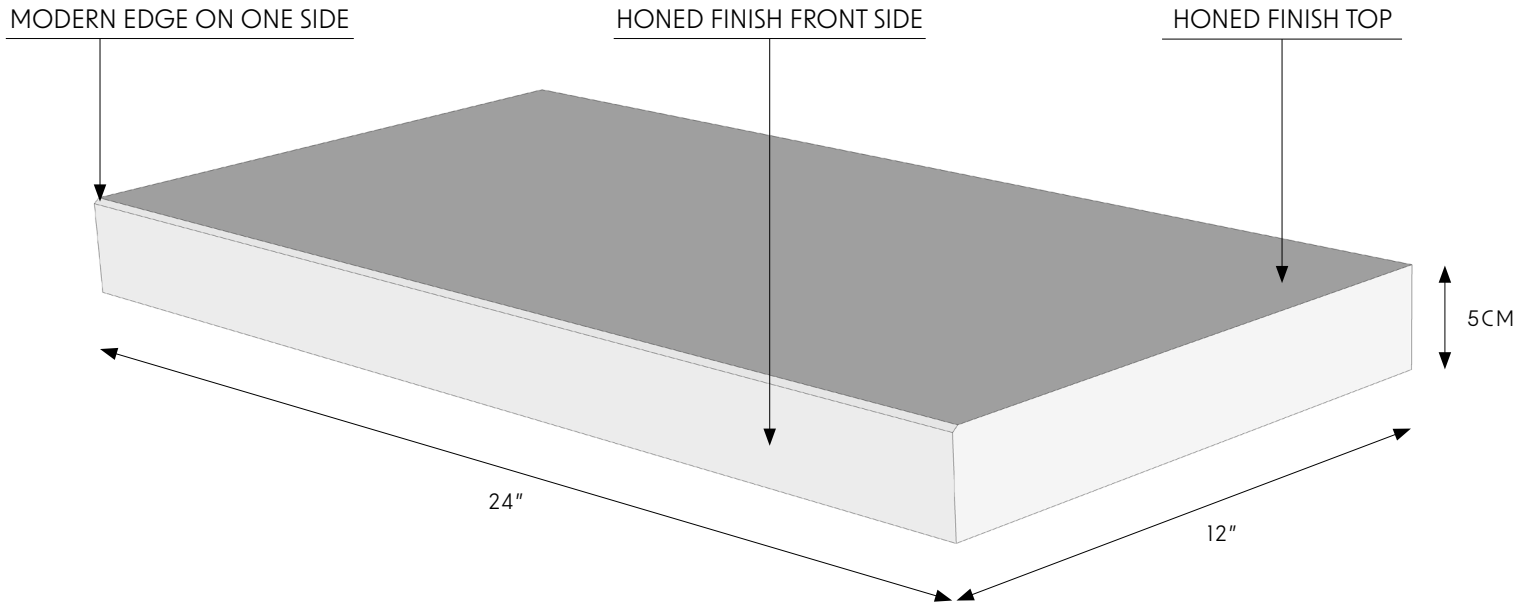


| | | | |
|---|---|---|---|
| **ITEM NAME** | SILVER PREMIUM TRAVERTINE MODERN COPING | **PART NUMBER** | TRVSILVER1224H-5MEPC |
| **COUNTRY** | TURKEY | **FORMAT/ TYPE** | COPING |
| **CATEGORY** | TRAVERTINE | **UOM** | PC |
| **FINISH** | HONED | **THICKNESS** | 5CM |
| **DIMENSIONS** | 12 X 24 | **WEIGHT** | 58 LBS |
| **PROFILE** | MODERN EDGE | **COLOR** | LIGHT GREY, DARK GREY, TAN, SILVER |

**APPLICATIONS**

MASONRY WALLS, COLUMNS, LANDSCAPE, STEPS & POOLS

FOR MORE INFO, PLEASE CONTACT CSR@NSRSTONE.COM
1800 East Via Burton St, Anaheim, CA 92806 | P. 714.821.5400 | F. 714.821.3700 | nsrstone.com

NATURAL STONE RESOURCES
EXPORTERS · IMPORTERS · DISTRIBUTORS

# SILVER PREMIUM
## COPING

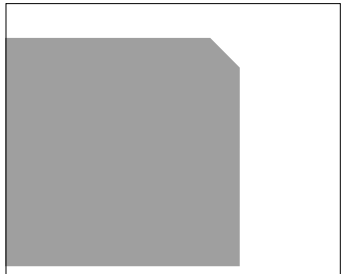

MODERN EDGE

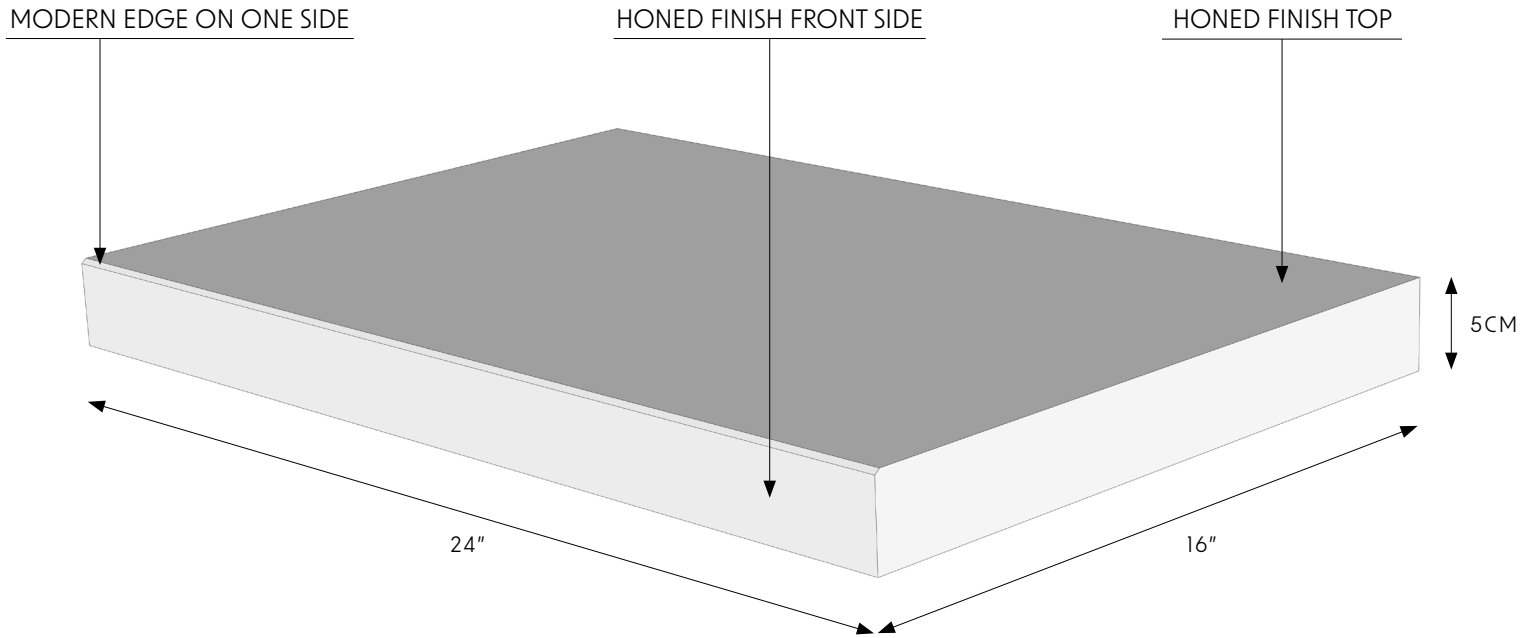


| | | | |
|---|---|---|---|
| **ITEM NAME** | SILVER PREMIUM TRAVERTINE MODERN COPING | **PART NUMBER** | TRVSILVER1624H-5MEPC |
| **COUNTRY** | TURKEY | **FORMAT/ TYPE** | COPING |
| **CATEGORY** | TRAVERTINE | **UOM** | PC |
| **FINISH** | HONED | **THICKNESS** | 5CM |
| **DIMENSIONS** | 16 X 24 | **WEIGHT** | 58 LBS |
| **PROFILE** | MODERN EDGE | **COLOR** | LIGHT GREY, DARK GREY, TAN, SILVER |

**APPLICATIONS**

MASONRY WALLS, COLUMNS, LANDSCAPE, STEPS & POOLS

FOR MORE INFO, PLEASE CONTACT CSR@NSRSTONE.COM
1800 East Via Burton St, Anaheim, CA 92806 | P. 714.821.5400 | F. 714.821.3700 | nsrstone.com